AWESOMATIX A800RR

SETUP SHEET

NAME
COUNTRY
RACE
TRACK

DATE
TEMP. °C AIR / TRACK /
TRACK SURFACE ASPHALT ☐ CARPET ☐
TRACK LAYOUT TECHNICAL ☐ MIXED ☐ FAST ☐
TRACTION LOW ☐ MEDIUM ☐ HIGH ☐

FRONT

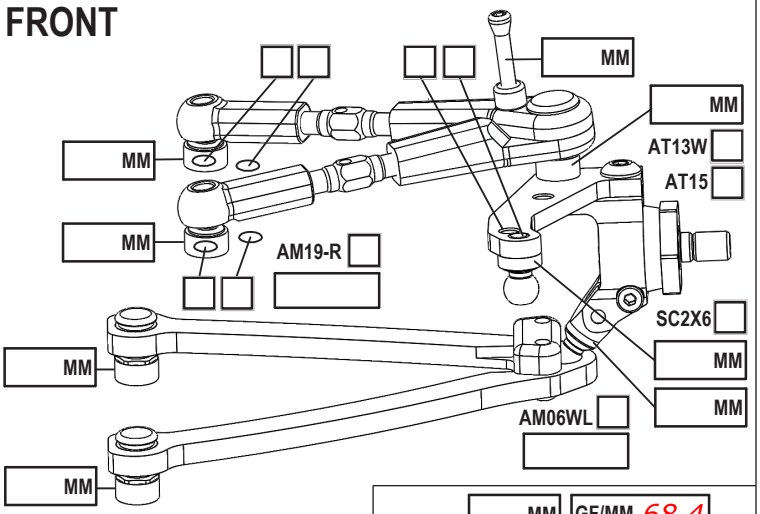

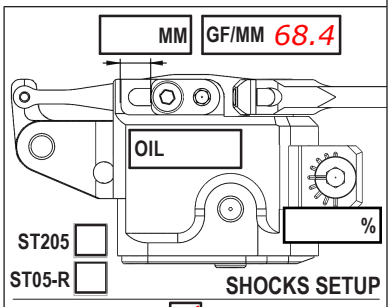

CAMBER ANGLE / °
CASTER ANGLE / °
TOE ANGLE / °
RIDE HEIGHT / MM
DOWNSTOP / MM
ANTI-ROLL BAR Ø / MM
ARB STIFFENER 1/4 ☐ 1/2 ☐ 3/4 ☐ 1 ☐
LOWER ARM EXTENSION / MM 0
STEER. ARM AM14LS ☐
2ND SPRING SPR-P2 ☐ P1 ☐
WHEEL SPACER / MM
DRIVE SPOOL ☐ DIFF ☐
DRIVE POSITION DOWN ☐ UP ☐ +1 ☐
DIFF OIL | DIFF SHIMS

DAMPER D4 ✔
ROTOR 2 HOLES ✔
SPRING STD ✔ S ☐
SRS/RHS ARR. I ✔ II ☐
PSS SETUP 30% ☐ 25% ☐ 15% ☐
DAMPING LINEAR ☐ P1 ☐ P2 ☐
DAMPER SPACER / MM
C45 YES ☐ NO ☐

REAR

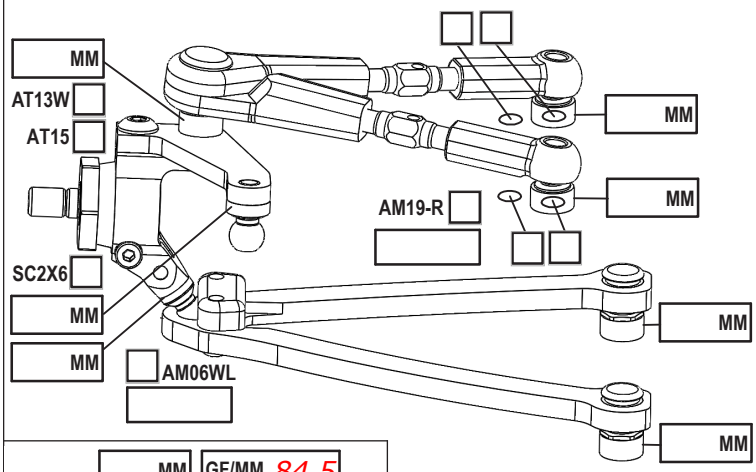

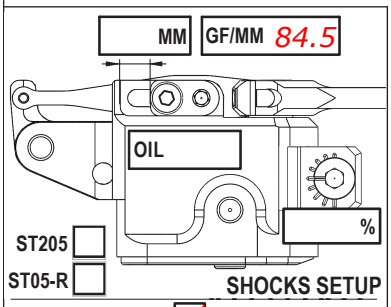

CAMBER ANGLE / °
CASTER ANGLE / °
TOE ANGLE / °
RIDE HEIGHT / MM
DOWNSTOP / MM
ANTI-ROLL BAR Ø / MM
ARB STIFFENER 1/4 ☐ 1/2 ☐ 3/4 ☐ 1 ☐
LOWER ARM EXTENSION / MM 0
STEER. ARM AM23-1 ☐
2ND SPRING SPR-P2 ☐ P1 ☐
WHEEL SPACER / MM
DRIVE DIFF ☐
DRIVE POSITION DOWN ☐ UP ☐ +1 ☐
DIFF OIL | DIFF SHIMS

DAMPER D4 ✔
ROTOR 2 HOLES ✔
SPRING STD ✔ S ☐
SRS/RHS ARR. I ✔ II ☐
PSS SETUP 30% ☐ 25% ☐ 15% ☐
DAMPING LINEAR ☐ P1 ☐ P2 ☐
DAMPER SPACER / MM
C45 YES ☐ NO ☐

CHASSIS FLEX AND WEIGHT SETTINGS

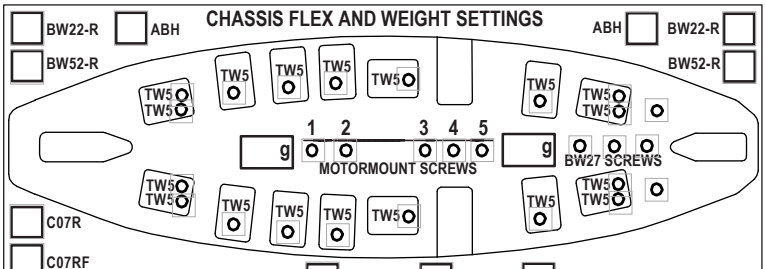

LOWER DECK C01B-RAF ☐ C01B-RC ☐ C01RS ☐ OTHER _____

☐ BUMPER TOP PLATE CUT FRONT BUMPER P15L ☐ OTHER _____

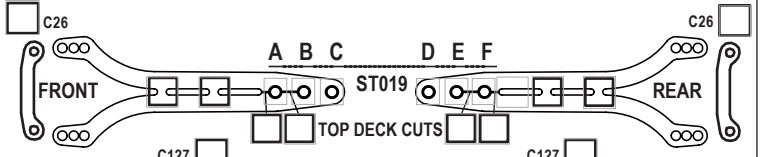

FRONT TOP DECK C127 ☐ C127S ☐ OTHER _____
REAR TOP DECK C127 ☐ C127S ☐ OTHER _____
SINGLE TOP DECK C27MMX ☐ OTHER _____
BELT TENSIONER AM279 ☐ OTHER _____

TIRES
INSERTS
SIDE WALLS GLUE Ø / MM F R
ADDITIVE TIME MIN. F R
TOTAL WEIGHT WEIGHT DISTRIBUTION % F R
NOTES:

MOTOR LATERAL SHIFT / MM
MOTOR
SPUR PINION 1 RATIO 0.00
BODY
WING
ESC
ESC SETTING
BEST LAPTIME QUALIF./FINAL POSITION /

SERVO
SERVOHORN / HEIGHT
STEER TRAVEL IN OUT
BATTERY
RECEIVER
RADIO

BODY POSITION

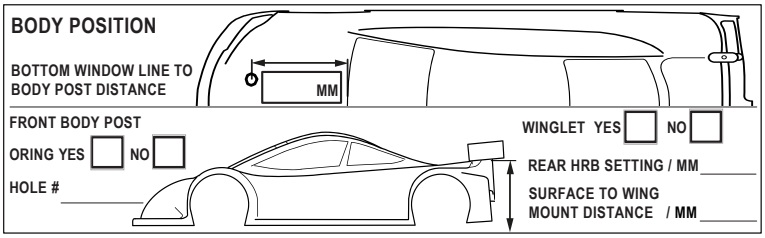

COMMENTS: